THIRD ANGLE PROJECTION

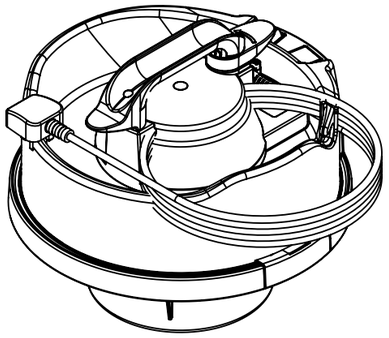

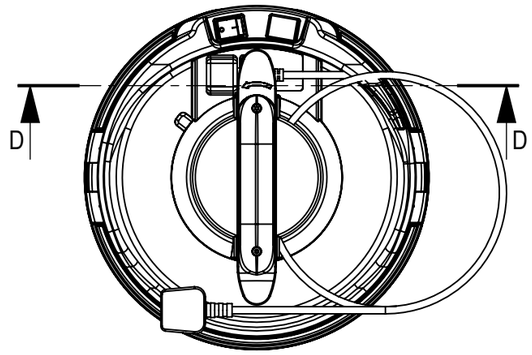

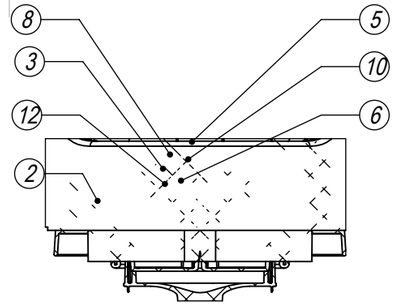

SECTION D-D
SCALE 1 : 6

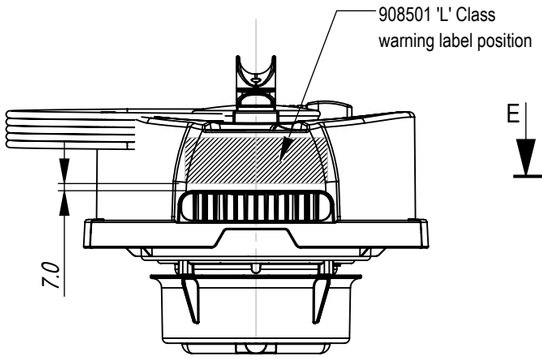

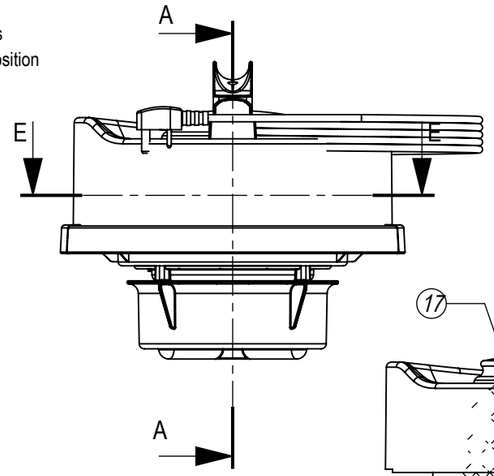

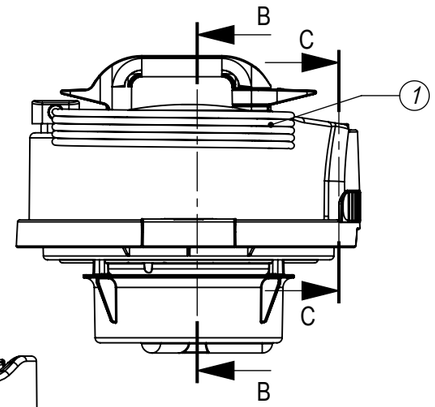

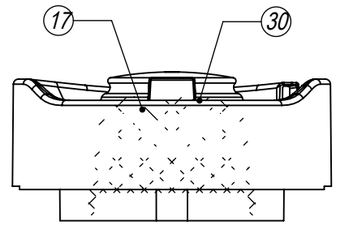

SECTION C-C
SCALE 1 : 6

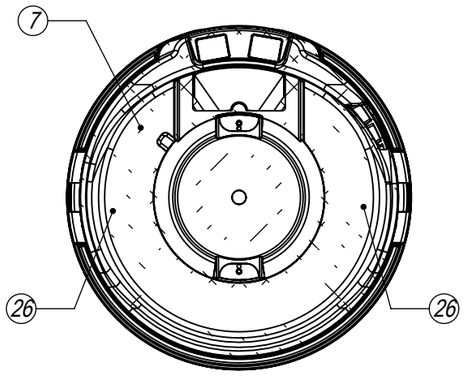

SECTION E-E
SCALE 1 : 6

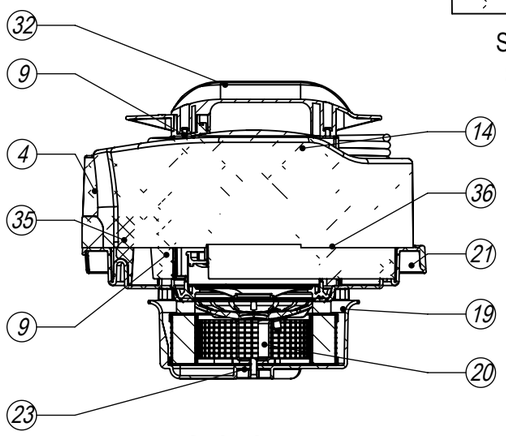

SECTION A-A
SCALE 1 : 6

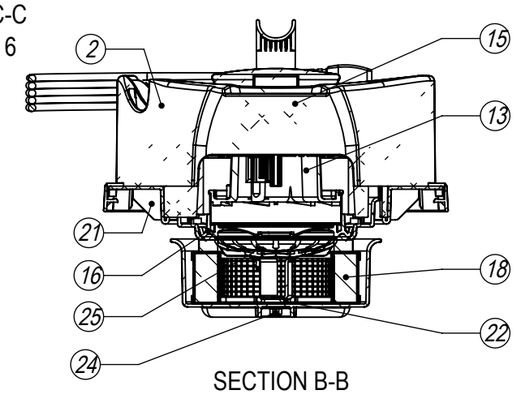

SECTION B-B
SCALE 1 : 6

ITEM NO.	Item_No	DESCRIPTION	QTY.
1	237079	CABLE EXIT NPV/NHV	1
2	237083	TOP MOTOR HOUSING (HEAD STYLE 4) 2 SWITCH - INC. PCB	1
3	237076	SWITCH HOUSING PLUGGED	1
4	229623	SWITCH COVER	1
5	227564	PLUG LOCATION CLAMP	1
6	325912	NPV / NHV TERMINAL BLOCK PLUS INSERTS	1
7	227957	BLANKING PLATE	1
8	206562	CONTACT PIN	2
9	291082	#8 SCREW 1"L T20 PAN HEAD P/L THREAD FORMING	9
10	219107	NO6.5/8 INCH LG.POZI-PAN.SCREW.Z/PL.PLASTITE	2
11	291152	NO8.1/2 INCH LG.T20.SCREW.Z/PL.PLASTITE	1
12	291151	M4 X 10MM LONG T20 SEMS SCREW Z/PL - PRODUCT CODE 8.8 - TX20 HEAD	2
13	205840	230V SINGLE STAGE THRO FLOW FAN MOTOR (DLI 653T) TCO (620)	1
14	229614	MOTOR PLATE BI -MATERIAL	1
15	237480	ADAPTOR MOTOR (DL1 603T)	1
16	237089	BOTTOM MOTOR GASKET - CUP MOTOR	1
17	230253	EVEREL ROCKER SWITCH	1
18	908549	FILTER CARTRIDGE H13 (DRILLED 6mm HOLE)	1
19	237622	Filter Cartridge Housing	1
20	908322	FILTER BRACKET C/W INSERTS	1
21	908879	NRV BOTTOM MOTOR HOUSING	1
22	908502	NEOPRENE SEAL	1
23	291048	M6 x M30 MILD STEEL ZINC PASS WASHER	1
24	219088	M6 NYLON INSERT NUT	1
25	219546	M5 X 20MM LONG POZI PAN SEMS SCREW	2
26	237115	NRV HARD EDGE TOGGLE	2
27	219236	M3 X 10MM LONG SLOT SCREW	1
28	219237	M3 FORM A WASHER	2
29	219070	M3 NYLON INSERT NUT	1
30	237082	BLANKING PLUG - ROCKER SWITCH	1
31	236009	10.0M X 1.00MM X 2 CORE NUCABLE (UK PLUG)	1
32	906071	CABLE MANAGEMENT HANDLE - MAIN BODY	1
33	906072	CABLE MANAGEMENT HANDLE - LOWER HOUSING	1
34	906073	CABLE MANAGEMENT HANDLE - SWIVEL LOCK	1
35	237674	AIRGUIDE (DL1 TYPE)	1
36	901616	WRAP-ACOUSTIC	1

SCREW TORQUE VALUES
ITEM 12 - NO6 PLASTITE 1 -1.6Nm
ITEM 11 & 13 - NO8 PLASTITE 2 - 2.6Nm
ITEM 14 - M4 SEMS SCREW 1 - 1.6Nm
ITEM 29 - M5 SEMS SCREW 2 - 2.6Nm
ITEM 28 - M6 NYLON INSERT NUT - 3Nm

Numatic INTERNATIONAL LTD
MILLFIELD ROAD, CHARD, SOMERSET
TA20 2GB
ENGLAND

20.0 THE EXAMPLE SHOWN DETAILS THE METHOD USED FOR IDENTIFYING CRITICAL (INSPECTION) DIMENSIONS WHERE APPLICABLE

TOLERANCES:- (UNLESS OTHERWISE STATED)
LINEAR: 0 DECIMAL PLACES = +/- 1.0mm
1 DECIMAL PLACE = +/- 0.25mm
2 DECIMAL PLACES = +/- 0.05mm
ANGULAR:- +/- 0.5 DEGREE

TOOL NUMBER:

WEIGHT:

All components must be ROHS compliant.

TITLE:- HEAD STYLE 44 GA

DIMENSIONS IN MILLIMETERS

MATERIAL:-

ITEM No(s):- -

FINISH:-

DRG No:- DRW-28533

REVISION:	CHANGE DETAIL:	Internal Code:	DRAWN:	APPD:	DATE:
A07	'L' CLASS WARNING LABEL POSITION NOTE ADDED	TB	Daniel Borrill	-	

THIS DRAWING IS COPYRIGHT AND IS THE PROPERTY OF NUMATIC INTERNATIONAL LTD. AND MUST NOT BE USED WITHOUT THEIR KNOWLEDGE NOR COMMUNICATED TO ANY PERSON OR COMPANY.

PRINT SIZE **A3**

NOT TO SCALE